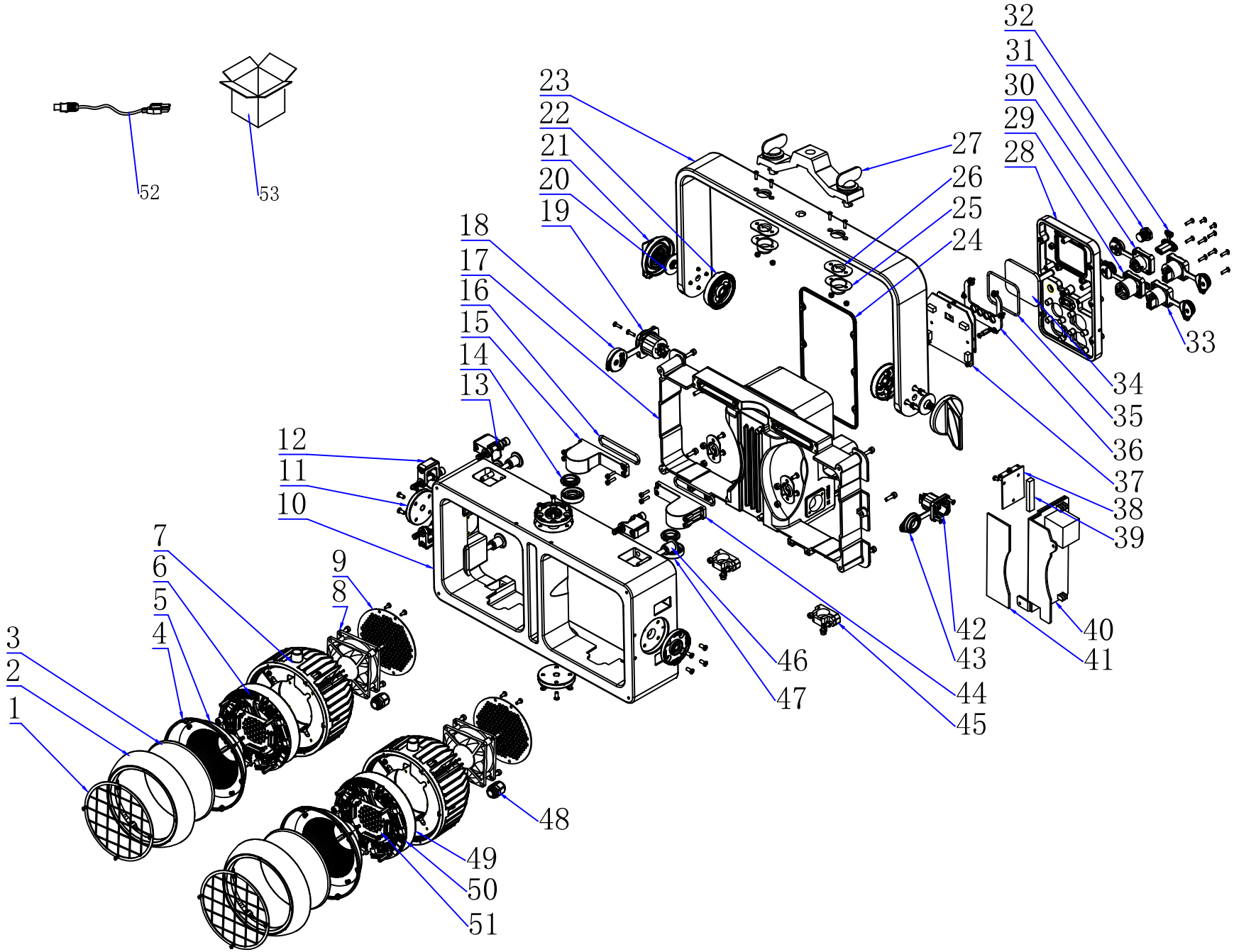
52
53
23
22
21
20
19
18
17
16
15
14
13
12
11
10
7
6
5
4
3
2
1
9
8
27
26
25
24
32
31
30
29
28
33
34
35
36
37
38
39
40
41
42
43
44
45
46
47
48
49
50
51

EXPLODED DIAGRAM REF STATIC	FIXTURE	PART NUMBER	DESCRIPTION
1	STRIKEARRAY2C	PTJ61103925	GLASS NET (BOM#1)
2	STRIKEARRAY2C	PTJ61103922B	TOP COVER (BOM#2)
3	STRIKEARRAY2C	PTJ32300725A	LENS (BOM#3)
4	STRIKEARRAY2C	PTJ32600320	CUSHION RUBBER FOR TOP COVER (BOM#4)
5	STRIKEARRAY2C	PTJ61107824A	REFLECT CUP (BOM#5)
6	STRIKEARRAY2C	PTJ21003911B	DRIVER PCB A (BOM#6)
7	STRIKEARRAY2C	PTJ61108173	HEAT SINK (BOM#7)
8	STRIKEARRAY2C	PTJ33200262E	FAN (BOM#8)
9	STRIKEARRAY2C	PTJ61107130A	FAN PROTECTION NET (BOM#9)
10	STRIKEARRAY2C	PTJ61103935	HOUSING (BOM#10)
11	STRIKEARRAY2C	PTJ61103864	TOOTH LOCK PLATE B (BOM#11)
12	STRIKEARRAY2C	PTJ61103923B	HOLDER (BOM#12)
13	STRIKEARRAY2C	PTJ32500099	SPRING (BOM#13)
14	STRIKEARRAY2C	PTJ32000992	BEARING INNER COVER (BOM#14)
15	STRIKEARRAY2C	PTJ61103931	BEARING COVER A (BOM#15)
16	STRIKEARRAY2C	PTJ32600319A	CUSHION RUBBER FOR BEARING COVER (BOM#16)
17	STRIKEARRAY2C	PTJ61107834C	BASE COVER (BOM#17)
18	STRIKEARRAY2C	PTJ33300049	CUSHION RUBBER FOR IP POWER OUT SOCKET (BOM#18)
19	STRIKEARRAY2C	PTJ33300058A	IP POWER OUT SOCKET (BOM#19)
20	STRIKEARRAY2C	PTJ32000991	PC RING (BOM#20)
21	STRIKEARRAY2C	PTJ61107263	HANGING BRACKET KNOB (BOM#21)
22	STRIKEARRAY2C	PTJ61103863	TOOTH LOCK PLATE A (BOM#22)
23	STRIKEARRAY2C	PTJ14000694	HANGING BRACKET ASSEMBLY (BOM#23)
23	STRIKEARRAY2C	PTJ61107864B	HANGING BRACKET (BOM#23)
24	STRIKEARRAY2C	PTJ32600745	CUSHION RUBBER FOR REAR (BOM#24)
25	STRIKEARRAY2C	PTJ72000132B	SCREW ON OMEGA BRACKET (BOM#25)
26	STRIKEARRAY2C	PTJ61106103	CLAMP LOCK (BOM#26)
27	STRIKEARRAY2C	PTJ61001311E	OMEGA BRACKET (BOM#27)
28	STRIKEARRAY2C	PTJ61107835C	BASE REAR COVER (BOM#28)
29	STRIKEARRAY2C	PTJ42000158B	DMX CONNECTOR(5PIN,FEMALE) (BOM#29)
30	STRIKEARRAY2C	PTJ42000159B	DMX CONNECTOR(5PIN,MALE) (BOM#30)
31	STRIKEARRAY2C	PTJ34100160A	VALVE (BOM#31)
32	STRIKEARRAY2C	PTJ33300063	USB SOCKET (BOM#32)
33	STRIKEARRAY2C	PTJ33300060A	IP NETWORK SOCKET (BOM#33)
34	STRIKEARRAY2C	PTJ32300594B	DIPLAY GLASS (BOM#34)
35	STRIKEARRAY2C	PTJ32600315	CUSHION RUBBER FOR DISPLAY GLASS (BOM#35)
36	STRIKEARRAY2C	PTJ62000571	DISPLAY COVER (BOM#36)
37	STRIKEARRAY2C	PTJ21004151	MPCB + TOUCHING BOARD WITH DISPLAY (BOM#37)
38	STRIKEARRAY2C	PTJ21003878	SWITCHING PCB (BOM#38)
39	STRIKEARRAY2C	PTJ32000857	FOAM (BOM#39)
40	STRIKEARRAY2C	PTJ33000489E	PSU (BOM#40)
41	STRIKEARRAY2C	PTJ34000283	THERMAL PAD (BOM#41)
42	STRIKEARRAY2C	PTJ33300056A	IP POWER IN SOCKET (BOM#42)
43	STRIKEARRAY2C	PTJ33300048B	CUSHION RUBBER FOR IP POWER IN SOCKET (BOM#43)
44	STRIKEARRAY2C	PTJ61103932	BEARING COVER B (BOM#44)
45	STRIKEARRAY2C	PTJ62001130B	FIXED SHAFT HOLDER (BOM#45)
46	STRIKEARRAY2C	PTJ31000523A	SAFETY PIN (BOM#46)
47	STRIKEARRAY2C	PTJ31000607	OIL SEAL (BOM#47)
48	STRIKEARRAY2C	PTJ33300079	IP CONNECTOR (BOM#48)
49	STRIKEARRAY2C	PTJ34000249A	THERMAL PAD (BOM#49)
50	STRIKEARRAY2C	PTJ21003910B	DRIVER PCB B (BOM#50)
51	STRIKEARRAY2C	PTJ21003883B	LED PCB (BOM#51)
52	STRIKEARRAY2C	PTJ23100149B	POWER CABLE (US) (BOM#52)